SPECIFICATION

A: MATERIAL:
- 1.BODY: PA66
- 2.TERMINAL: Cu PLATED Sn
- 3.PIN: Cu PLATED Ni

B: CHARACTERISTICS:
- 1.RATING: 2.5A 250V~(C-ULus, ENEC & CCC & KC)
- 2.INSULATION RESISTANCE:100MΩ MIN,AT 500VDC
- 3.ELECTRIC STRENGTH : 3000 VAC/1MIN,LEAKAGE CURRENT UNDER 0.5mA

C: APPROVALS: C-ULus, ENEC & CCC & KC

D: MATERIAL USED MUST BE COMPLY WITH HQI-0010

E: CAN MEET RoHS,RoHS2.0,HF

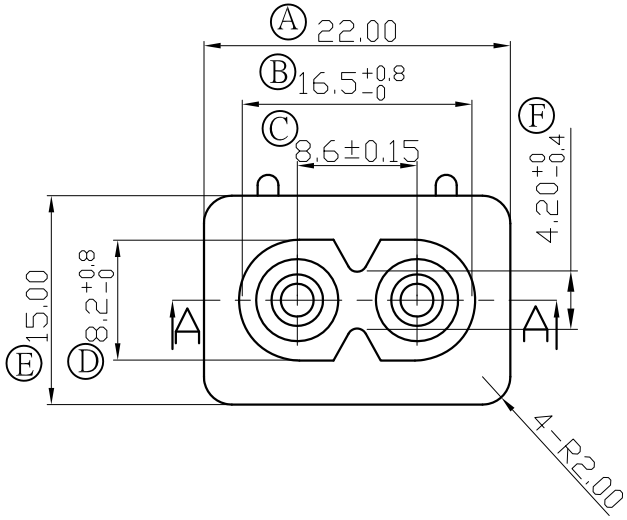

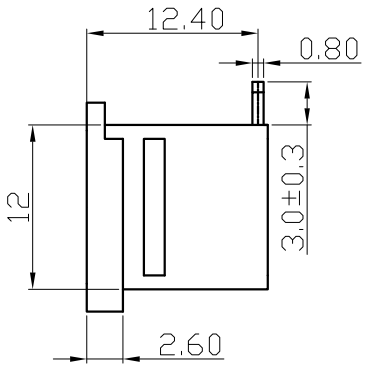

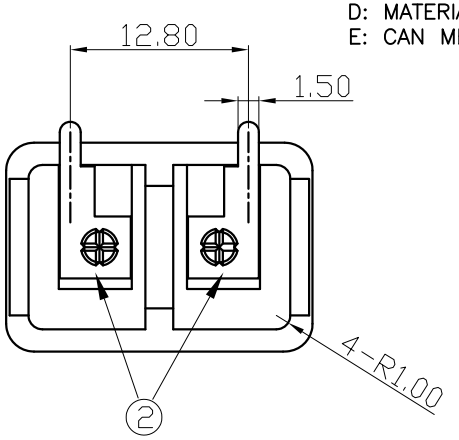

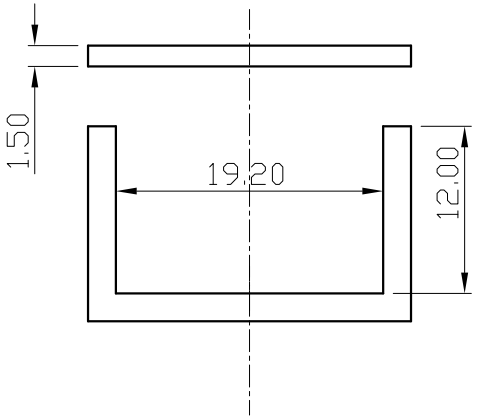

PANEL CUT-OUT

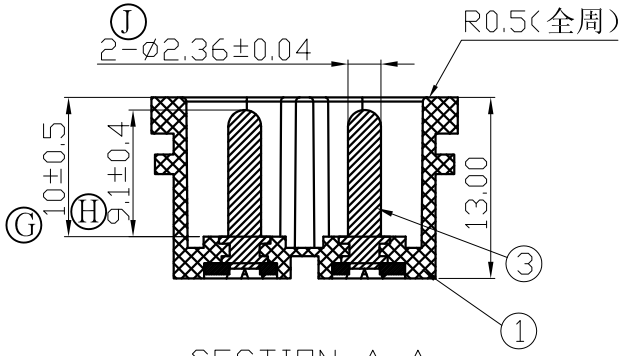

SECTION A-A

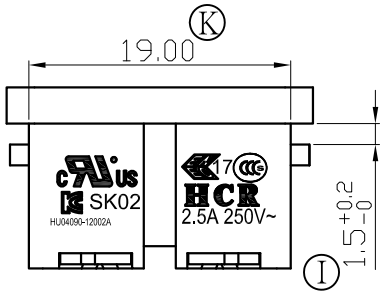

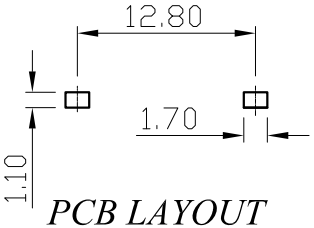

PCB LAYOUT

TOLERANCES UNLESS OTHERWISE 未指定容許差尺寸之公差	
BASIC DIMENSIONS TOLERANCES	
UP TO 10 (10以下)	±0.15
ABOVE 10 TO 30(10~30)	±0.3
ABOVE 30 TO 100(30~100)	±0.5
ANGULAR DIMENSIONS(角度)	±5°
DIMENSION UNIT	mm

NO	DATE	REVISION DESCRIPTION	REVISION	DRAWN	APPROVED
2					
1					
0	2012/11/24	新制訂	A0		

東莞市華之力電子有限公司 DONGGUAN HCR ELECTRONICS CO., LTD.

核准 APPROVED BY		日期 DATE	20121124	投影法 PROJECT		機型 PART NAME	INLET SOCKET
校對 CHECKED BY		日期 DATE	20121124	比例 SCALE	1:1	型號 PART NO	SK02
繪圖 DRAWN BY		日期 DATE	20121124	路徑 DWG NO	E:\成品圖\SK02\820076	料號 ITEM NO	SK02-3801232221H